SERIES 830, 831, 832, 833 • 2mm GRID HEADERS AND SOCKETS • SINGLE AND DOUBLE ROW STRIPS

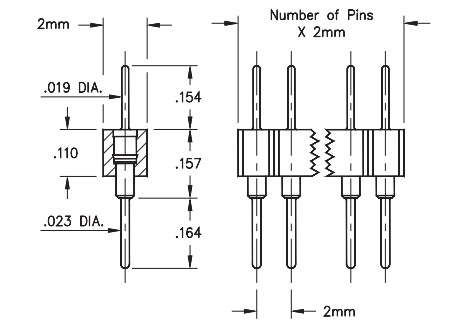

FIG. 1

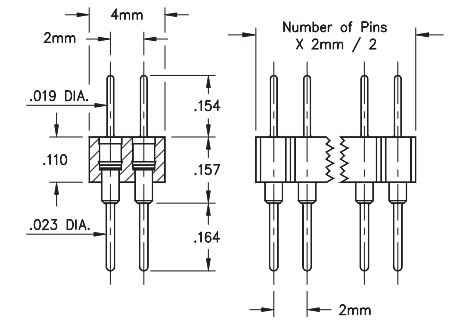

FIG. 2

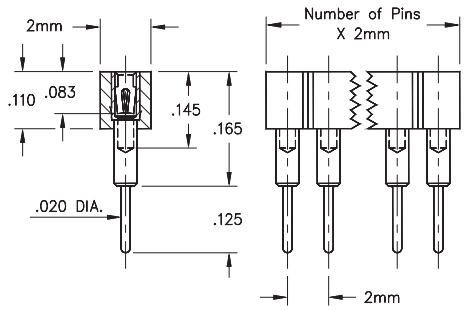

FIG. 3

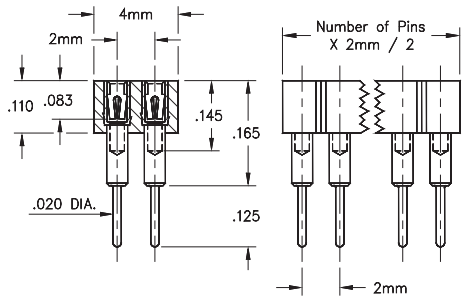

FIG. 4

- Series 830 single & double row interconnects have 2mm pin spacing and permit board stacking as low as .322"
- Pin headers (830 & 832 series) use MM #5012 pins. See page 208 for details
- Sockets (831 & 833 series) use MM #1802 receptacles and accept pin diameters from .015"-.025". See page 169 for details
- Contact is rated at 3 amps
- Insulators are high temperature thermoplastic, suitable for all soldering operations

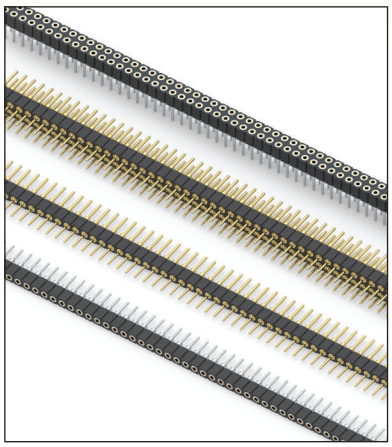

ORDERING INFORMATION

FIG. 1	**Series 830...001**	**Single Row Pin Header**
	830-XX-0_ _-10-001000	
	Specify number of pins ← 01-50	
FIG. 2	**Series 832...001**	**Double Row Pin Header**
	832-XX-_ _ _-10-001000	
	Specify number of pins ← 004-100	

RoHS-2 2011/65/EU

XX=Plating Code See Below

For Electrical, Mechanical & Enviromental Data, See page 264

SPECIFY PLATING CODE XX=	10 ◆	90	40 ◆	
Pin Plating	10 µ" Au	200 µ" Sn/Pb	200 µ" Sn	

FIG. 3	**Series 831...001**	**Single Row Socket**
	831-XX-0_ _-10-001000	
	Specify number of pins ← 01-50	
FIG. 4	**Series 833...001**	**Double Row Socket**
	833-XX-_ _ _-10-001000	
	Specify number of pins ← 004-100	

RoHS-2 2011/65/EU

XX=Plating Code See Below

For Electrical, Mechanical & Enviromental Data, See page 264

SPECIFY PLATING CODE XX=		91	93		41 ◆	43 ◆	47 ◆
Sleeve (Pin)		200 µ" Sn/Pb	200 µ" Sn/Pb		200 µ" Sn	200 µ" Sn	200 µ" Sn
Contact (Clip)		10 µ" Au	30 µ" Au		10 µ" Au	30 µ" Au	Au Flash