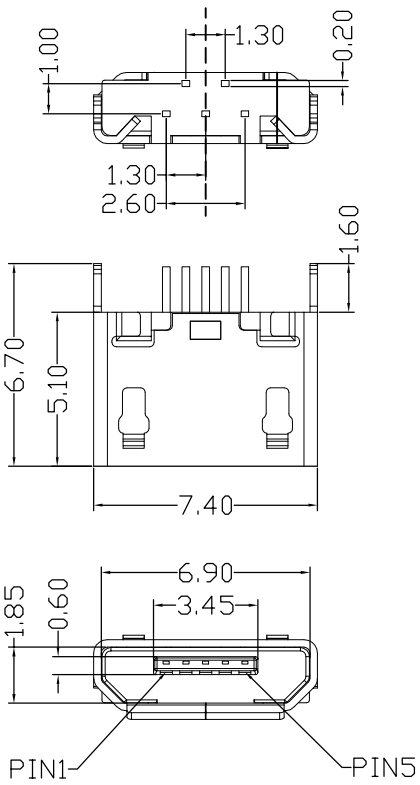

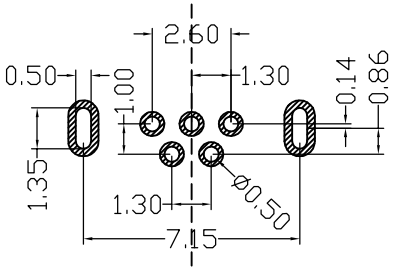

RECOMMENDED PCB LAYOUT
TOLERANCE:±0.05

NOTES:

1. MATERIAL:
   1.1 HOUSING:THERMOPLASTIC FLAMMABILITY RATING UL94-0
   1.2 CONTACT:COPPERY ALLOY T=0.15MM
   1.3 SHELL: COPPERY ALLOY T=0.25MM
2. FINISH:
   2.1 CONTACT:
   1U"MIN,PLATED ON CONTACT AREA
   G/F PLATING ON SOLDER TAIL AREA
   50~80U" NICKEL UNDERPLATING OVERALL
   2.2 SHELL:
   80~120U" MATTER TIN PLAING ALL
   50~80U" NICKEL UNDERPLATING OVERALL
3. SPECIFICATION:
   3.3 CURRENT RATING:0.5A(2.3.4CONTACT)/1.8A (1.5CONTACT)MAX.
   3.2 VOLTAGE:30 VAC
   3.3 TEMPERATURE RANGE:-30°C~85°C
   3.4 CONTACT RESISTANCE:30 MILLIONHM MAX.
   3.5 DIELECTRIC WITHSTANDING VOLTAGE;250VAC R.M.S
   3.6 INSULATION RESISTNACE:100 MEGOHMS MIN

05XX-4BH70-X

1:AU 1U"
6:AU 30U"

T:TIN
N:NICKEL

S:Scrolls F:Flat

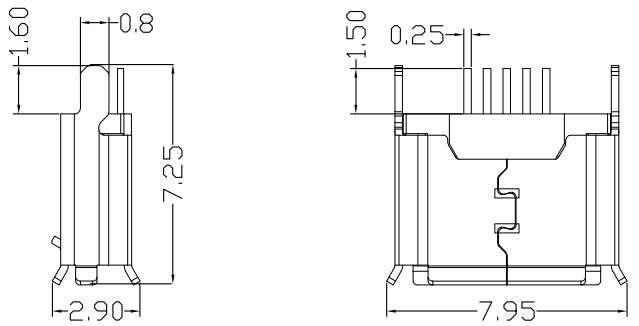

S:Scrolls

———		new		2015/5/3	A	瀚源
ECN BO.		DESCRIPTION.		DATE.	REV.	
DESIGNED	CHECKED	APPROVAL	DRAWING NUMBER		SCALT: 1/2	SCALE: 3:1
Mikey	Tom	Jerry	PART NAME	05XX-4BH70-X	UNLESS OTHERWISE SPECIFIED,TOLERANCE:	X. ±0.25 X.x ±0.20 X.xx ±0.15 ANGULAIR ±3
			MODEL NAME	05XX-4BH70-X		
			3RD ANGLE PROJ	HanElectricity Co.,LTD		FILE.NO.