CUSTOMER

REV.	ECN NO.	DESCRIPTION	DATE	DESIGN

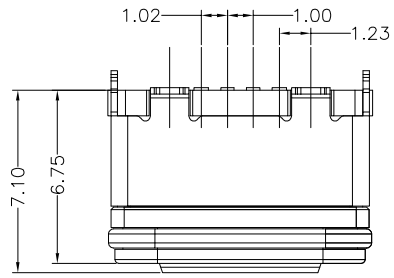

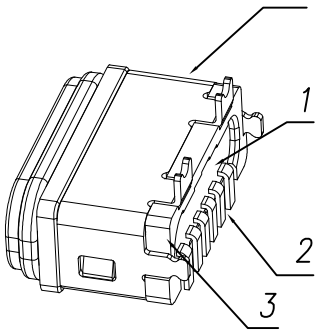

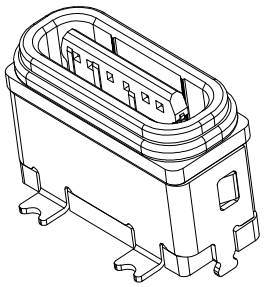

Note:
1.Material:
1.1 Housing: lcp
1.2 Contact:C5191,t=0.20mm
1.3 InnerShell: LCP
1.4 OutShell: SUS304
2.ELECTRICAL:
2-1:CURUENT RATAING:
VBUS AND GND CONTACTS RATED AT 1.5A
PARALLELED FOR A TOTAL OF 3A;
2-2:INITIAL CONTACT RESISTANCE :40 MEGOHMS
2-3:DIEELECTRIC WITHSTANDING VOLTAGE:
100V AC MIN;
3:MECHANICAL CHARACTERISTICS:
3-1:MATING FORCE:5~20N
3-2:UNMATING FORCE:8~20N(INITIAL),
6~20N(AFTER 10000 CYCLES)
3-3:FREQUENCE: 200±50 CYCLES /HOUR,10000 CYCLES
3-4:OPERATING TEMPERATURE ;-40°~80°.
4: WATERPROOF: IPX7.

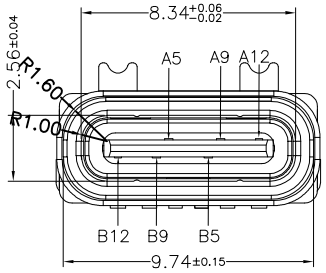

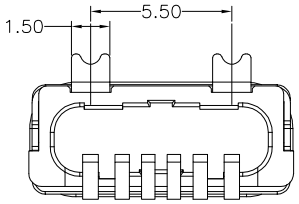

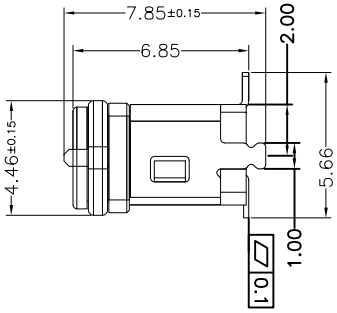

Cap dimensions

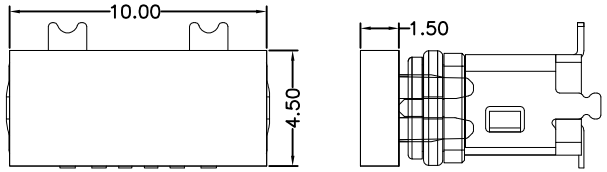

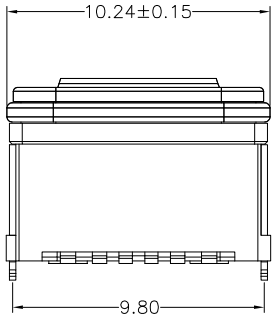

防水圈

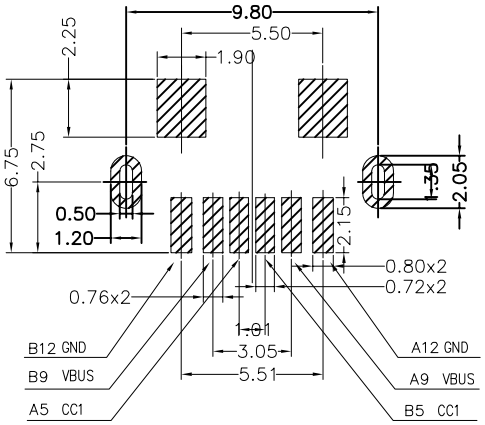

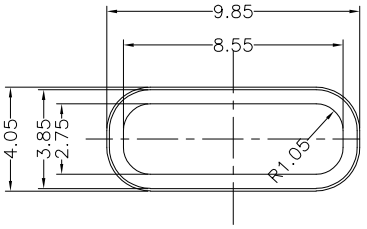

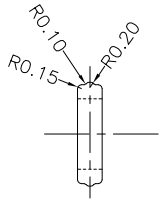

TABLE B

A5	CC1	B12	GND
A9	VBUS	B9	VBUS
A12	GND	B5	CC2
PIN	SIGNAL NAME	PIN	SIGNAL NAME

TOLERANCE		NAME(INTENDED USE) CUSTOMER DRAWING	FUYOU 广东富盈兴业精密科技实业有限公司 Guangdong FUYOU Precision Electronic Technology Co.,LTD.
X.X ±0.30	X.° ±10°	PART NO. FY23-018TC64F68-02	TITLE: CF 6P防水立贴6.8H全塑
.XX ±0.20	.X° ± 8°		
.XXX ±0.10	.XX° ± 5°	DESIGN: ZXM	DRAWG NO. FY23-018TC64F68-02
UNITS	mm		
MATERILA	----	CHED:	SCALE 1:1 / SHEET 1/2 / REV. A
FINISH	-----	APPD:	