REV.	DESCRIPTION	ECN NO.	NAME	DATE

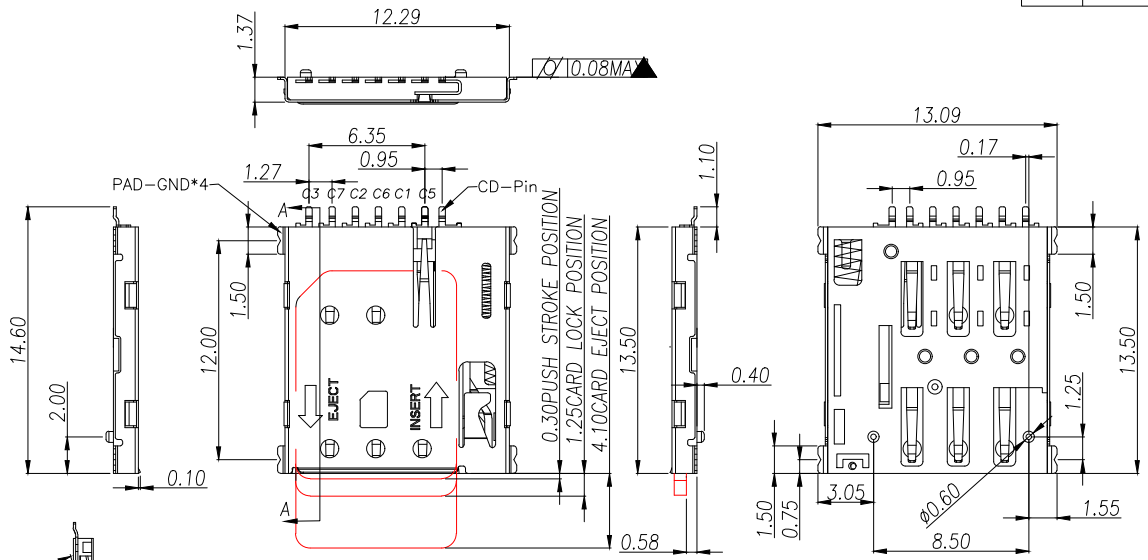

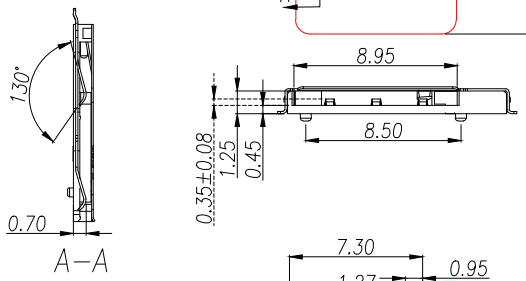

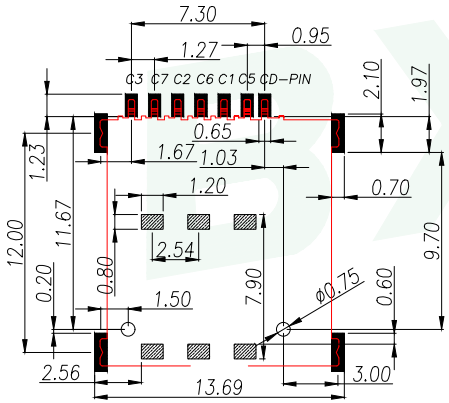

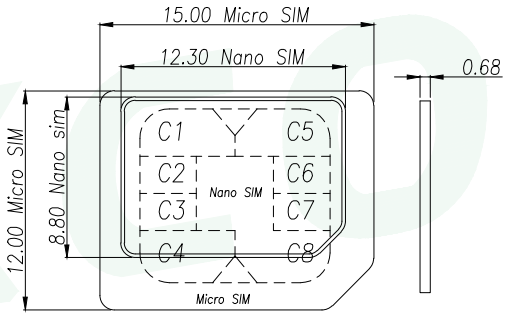

Specification

MATERIAL:

Insulator: High Temperature Thermoplastic,UL 94V-0.

Contact: Copper Alloy

Shell: SUS

PLATING:

Contact: Plated 50u'' Ni, Over All AU GOLD 1U

Shell: Plated 50u'' Ni Over All,PAD Au 1U

Electrical:

Current Rating :0.5Amps max.

Voltage Rating :125V AC/DC

Ambient Temperature Range :-20°C~+60°C

Storage Temperature Range :-40°C~+70°C

Ambient Humidity Range :95% R.H. Max.

Contact Resistance:100mΩmax.

Insulation Resistance:1000MΩmin./500VDC

Mating Cycles:3000 Insertions

产品耐温温度:260度

NANO SIM CARD	
Pin No.	NAME
C1	VCC OF SIM
C2	RST OF SIM
C3	CLK OF SIM
C5	GND OF SIM
C6	VPP OF SIM
C7	I/O OF SIM
C4/C8	N/A
CD	DETECTION SWITCH

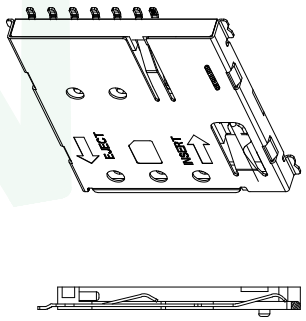

PAD AREA

KEEP OUT AREA

RECOMMENDED PCB LAYOUT

GENERAL TOLERANCE ±0.05

Circuit Diagram for Detect Switch

WITHOUT CARD	CLOSE	CLOSE CD SHELL
INSERTING CARD	OPEN	OPEN CD SHELL

GENERAL TOLERANCE	DONGGUAN BAOXUN PRECISION TECHNOLOGY CO., LTD					BXCONN®
DIM. TOL. X X.X ±0.30 X.XX ±0.25 X.XXX ±0.15 GENERAL ANGLE: ±3°	TITLE: 6+1PIN 1.37H PUSH PUSH NANO SIM CARD CONN.					
	DWG. NO.: SIM304-TD7P				DRAWN: MAX	
	PART NO.: SIM304-TD7P				CHECKED: ELLA	
	UNIT: mm	SCALE: none	SHEET: 1of 1	DWG. SIZE: A4	LAYER: bxconn	APPROVED: WILL