REV.	DESCRIPTION	ECN NO.	NAME	DATE

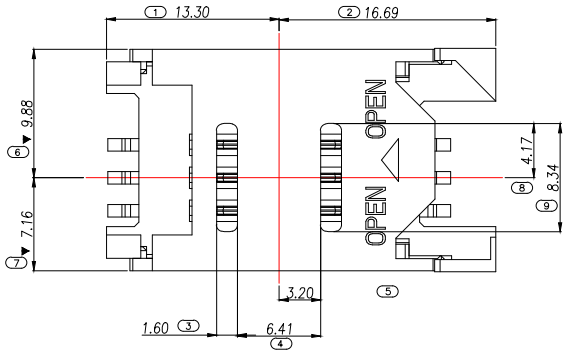

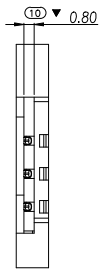

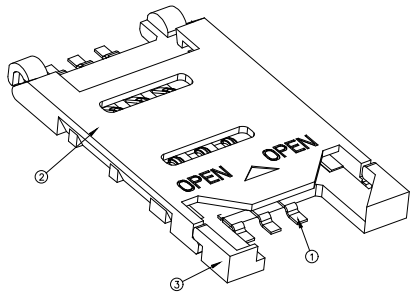

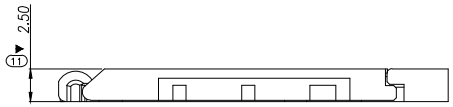

MINI SIM CARD	
Pin No.	NAME
C1	VCC OF SIM
C2	RST OF SIM
C3	CLK OF SIM
C5	GND OF SIM
C6	VPP OF SIM
C7	I/O OF SIM
C4/C8	N/A

1)MATERIAL:

HOUSING: THERMOPLASTIC,UL 94V-0, COLOR:BLACK

CONTACT: COPPER ALLOY

2)FINISH

CONTACT: GOLD FLASH

SOLDER AREA: TIN 100u" Min

3)Solder-ability

IR reflow:250°C,5sec.Max

Manual soldering:350°C ,3sec.max

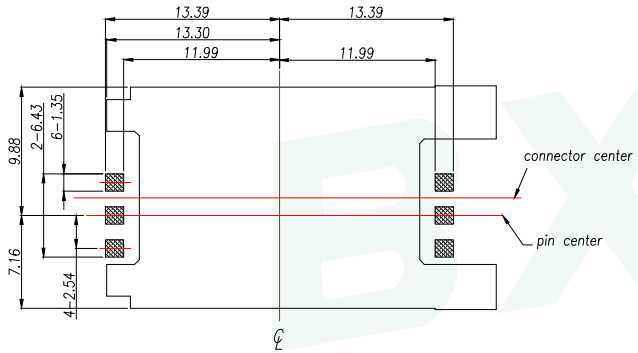

RECOMMENDED PCB LAYOUT

GENERAL TOLERANCE ±0.05

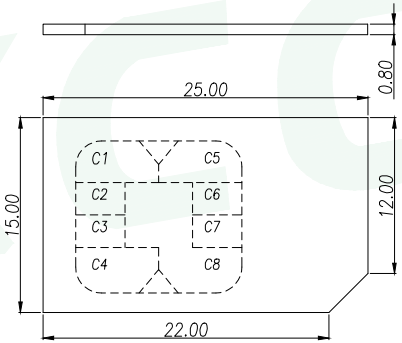

GENERAL TOLERANCE	DONGGUAN BAOXUN PRECISION TECHNOLOGY CO., LTD				BXCONN®
DIM. TOL. X X.X ±0.30 X.XX ±0.25 X.XXX ±0.15 GENERAL ANGLE: ±3°	TITLE: SIM CARD CONN 掀盖式 H2.5mm				
	DWG. NO.: SIM101-GZ6P			DRAWN: MAX	
	PART NO.: SIM101-GZ6P			CHECKED: ELLA	
	UNIT: mm	SCALE: none	SHEET: 1of 1	DWG. SIZE: A4	LAYER: bxconn	APPROVED: WILL

REV.	DESCRIPTION	ECN NO.	NAME	DATE

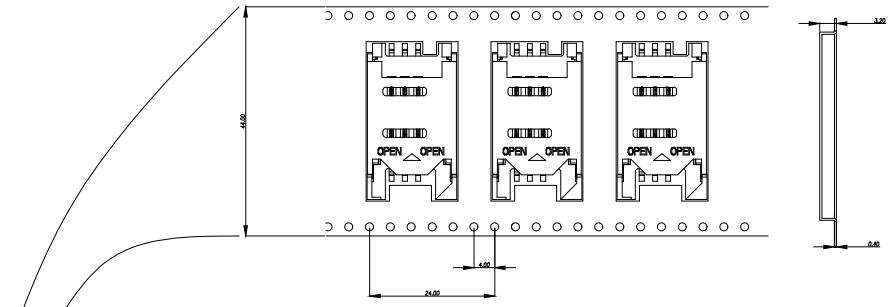

NOTES

1. NUMBER OF CONNECTORS:800PCS/REEL
2. LEAD TAPE LENGTH

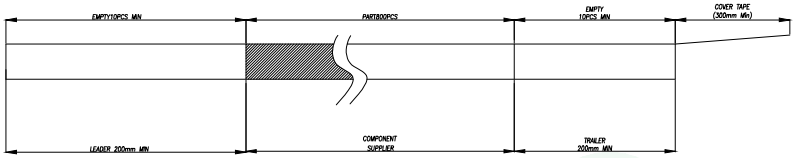

3.QUANTITY:8000PCS/CARTON

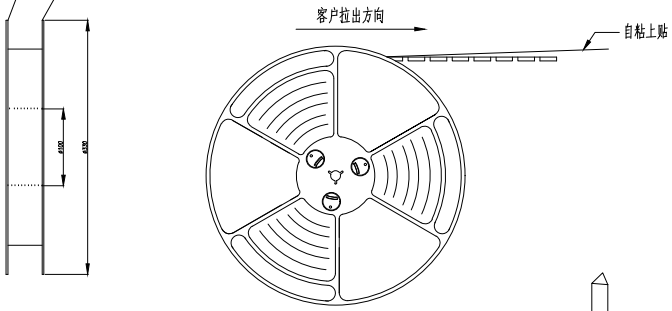

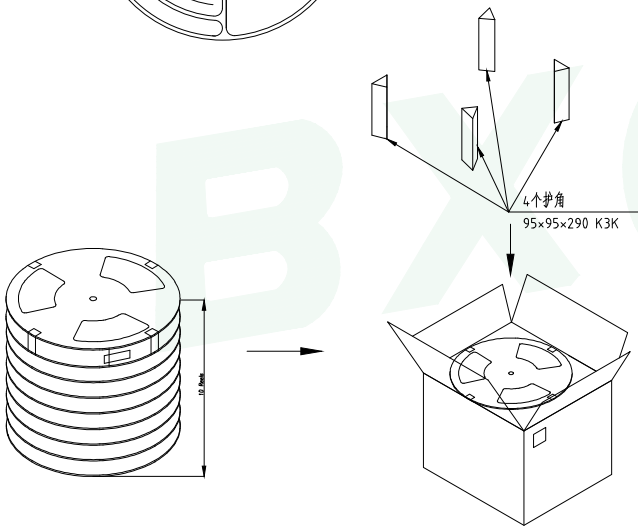

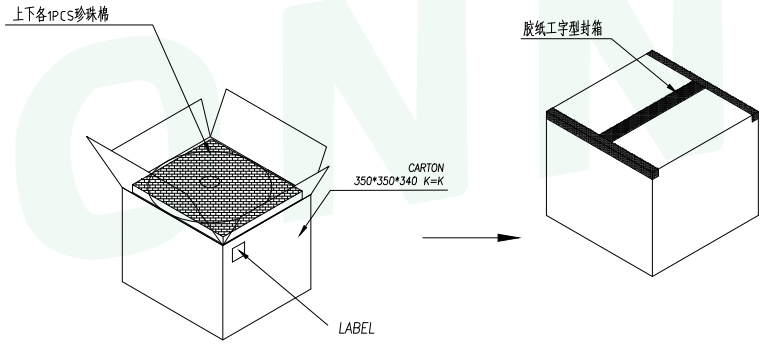

GENERAL TOLERANCE	DONGGUAN BAOXUN PRECISION TECHNOLOGY CO., LTD				BXCONN®
DIM. TOL. X X.X ±0.30 X.XX ±0.25 X.XXX ±0.15 GENERAL ANGLE: ±3°	TITLE: SIM CARD CONN 掀盖式 H2.5mm包装				
	DWG. NO.: SIM101-GZ6P			DRAWN: MAX	
	PART NO.: SIM101-GZ6P			CHECKED: ELLA	
	UNIT: mm	SCALE: none	SHEET: 1of 1	DWG. SIZE: A4	LAYER: bxconn	APPROVED: WILL