REV.	ECN NO OR DESCRIPTION	REVISED	DATE
X1	PROPOSE ONLY	SIMON	2014.08.10

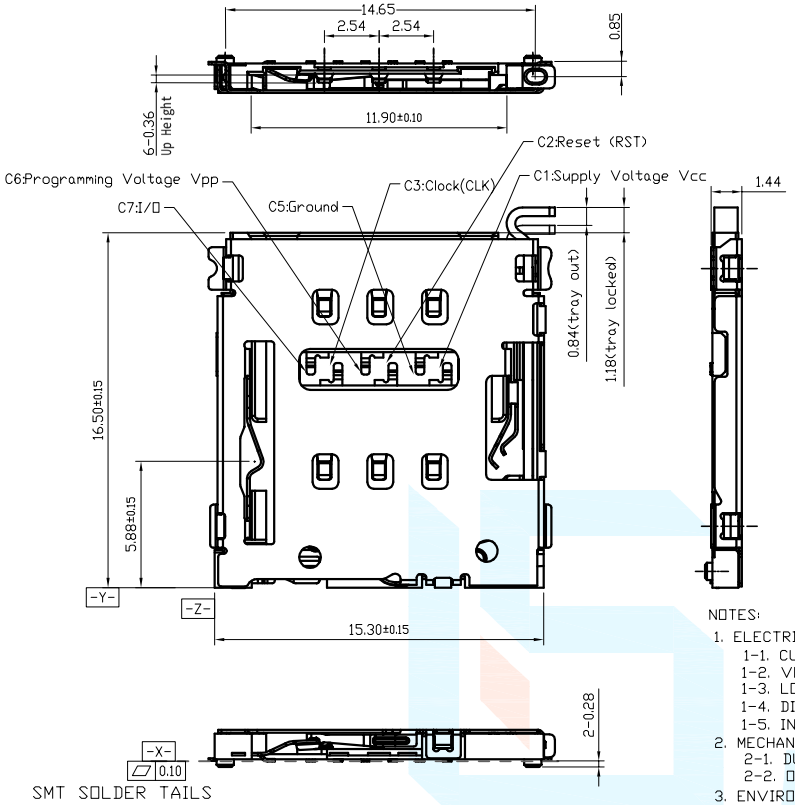

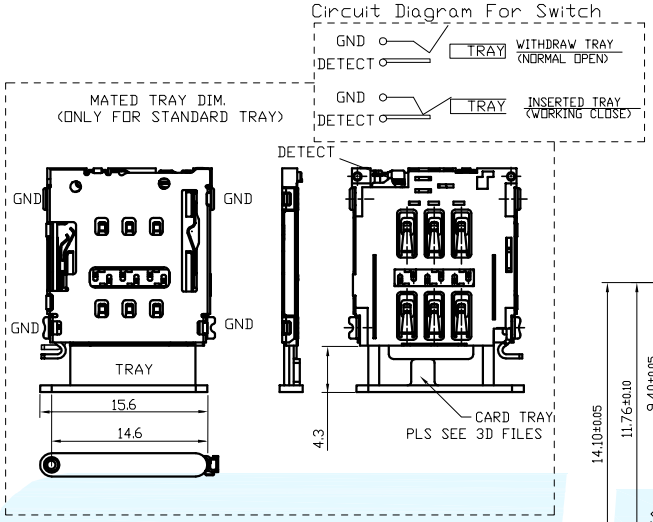

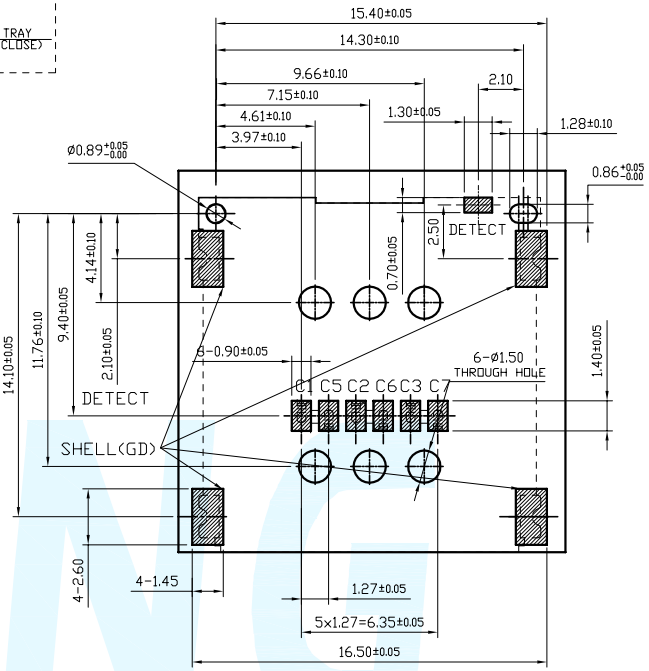

RECOMMENDED PC BOARD LAYOUT

TOLERANCE: ±0.05[TOP VIEW]

NOTES:

1. ELECTRICAL CHARACTERISTICS:
   1-1. CURRENT RATING: 1 Amp/PIN. MAX.
   1-2. VOLTAGE: 30V DC. MAX.
   1-3. LOW LEVEL CONTACT RESISTANCE: 30 mOhms MAX. INITIALLY.
   1-4. DIELECTRIC WITHSTANDING VOLTAGE: 500V AC MIN. FOR 1 MINUTE.
   1-5. INSULATION RESISTANCE: 100MOhms MIN.. (DC 500V FOR 1 MINUTE)
2. MECHANICAL CHARACTERISTICS:
   2-1. DURABILITY: 1500 CYCLES.
   2-2. OPERATING FORCE (INSERTING & WITHDRAWAL): 1N-10N.
3. ENVIRONMENTAL CHARACTERISTICS:
   3-1. OPERATING TEMP. RANGE: -25°C TO 85°C. [INCLUDING TERMINAL TEMP. RISE]
   3-2. STORAGE TEMP.: -40°C TO 85°C.
4. QUANTITY OF PRODUCTS: 1000PCS/REEL MIN.
5. PLEASE CONTACT SALES REPRESENTATIVE TO VERIFY PRODUCT DETAILS.
6. PART No

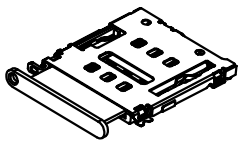

ISO . VIEW 3D

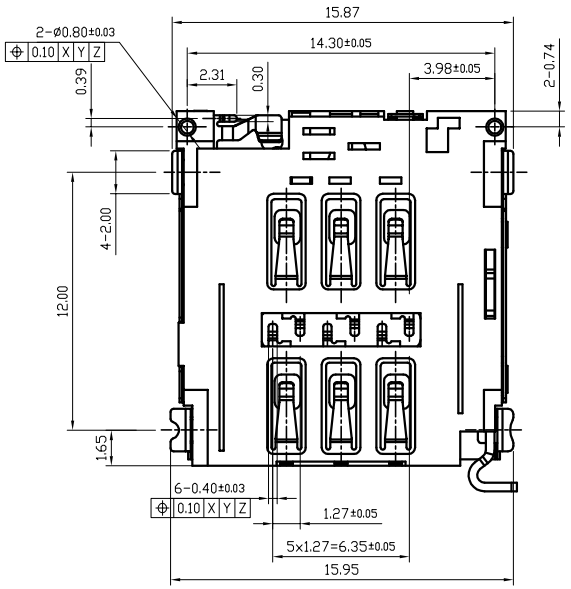

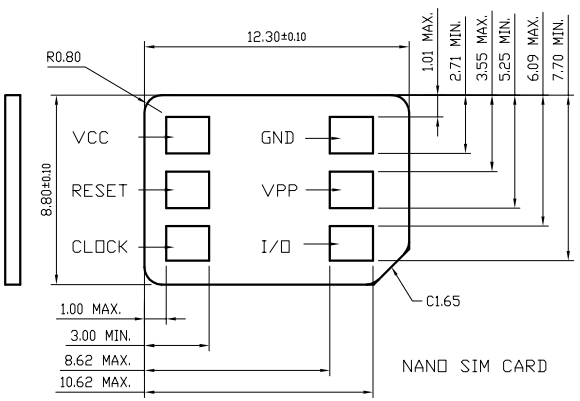

NANO SIM CARD

ITEM	PART NAME	Q'TY	DESCRIPTION
6	DETECT	1	BRONZE ALLOY, GOLD PLATING
5	HINGE	1	SUS, NO PLATING
4	LEVER	1	SUS, NO PLATING
3	SHELL	1	SUS, GOLD PLATING
2	HOUSING	1	LCP,BLACK
1	CONTACT	1	BRONZE ALLOY, GOLD PLATING

UNLESS OTHERWISE SPECIFED TOLERANCES

DECIMALS: X : ±0.5, X.X : ±0.20, X.XX : ±0.10

ANGLES: X : ±2°, X.X : ±1°

SOFNG

TITLE	NANO SIM Card 6pin 1.5H CONN. WITH LEVER (WITH DITECT NORMAL OPEN)		
DWN	JOHNLE	PART NO. SNO-018	
CHKD	KEVIN.D	SCALE:1:1	UNIT: mm
APVD	SIMON.M	SIZE: A4	SHEET:1OF 1	REV: A