REV.	DESCRIPTION	ECN NO.	NAME	DATE

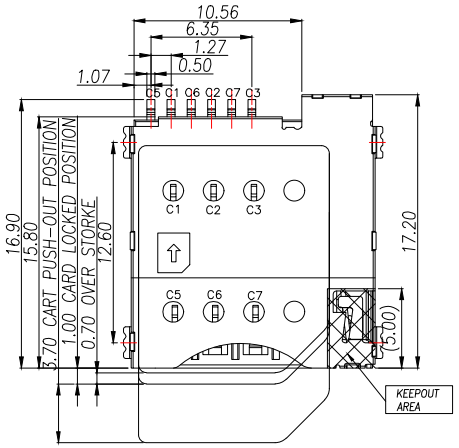

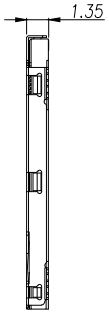

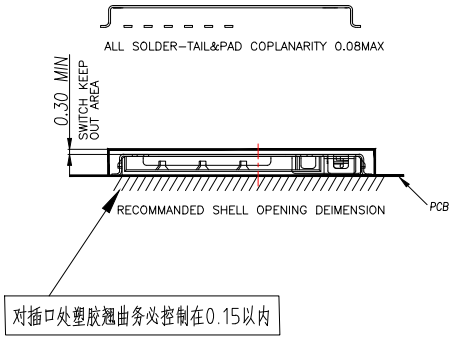

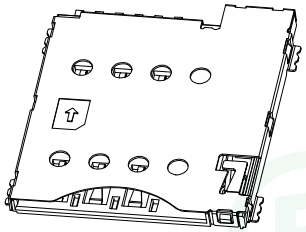

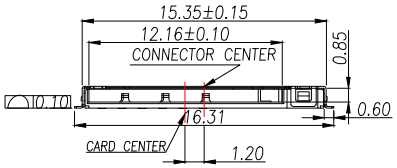

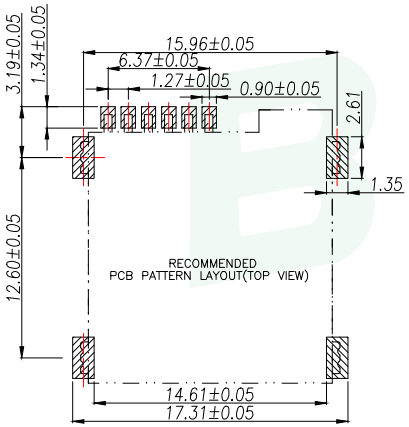

RECOMMENDED PCB LAYOUT
GENERAL TOLERANCE ±0.05

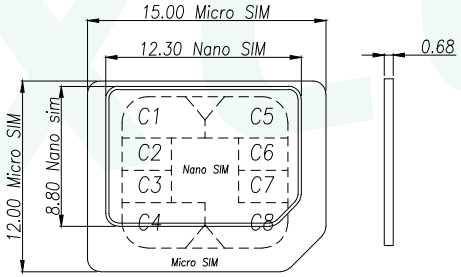

C8	RESERVED
C7	I/O
C6	VPP
C5	GND
C4	RESERVED
C3	CLK
C2	RST
C1	VCC
PIN NO.	PIN NAME

NOTES:

1. MATERIAL:
   INSULATOR: HIGH TERMERATURE THERMOPLASTIC,UL 94V-0
   CONTACT: COPPER ALLOY
   SHELL: SUS
2. ELECTRICAL CHARACTERISTICS:
   2-1. CURRENT RATING: 0.5 Amp. MAX.
   2-2. VOLTAGE: 100V DC. MAX.
   2-3. LOW LEVEL CONTACT RESISTANCE: 100 mOhms MAX. INITIALLY.
   2-4. DIELECTRIC WITHSTANDING VOLTAGE: 500V AC MIN. FOR 1 MINUTE.
   2-5. INSULATION RESISTANCE: (INITIAL) 1000MOhms MIN.. (FINAL) 100MOhms MIN.
   BY APPLYING 500V DC ON MATED AND UNMATED CONNECTORS THROUGH MIL-STD-202, METHOD 302.
3. MECHANICAL CHARACTERISTICS:
   3-1. DURABILITY: 5000 CYCLES.
   3-2. OPERATING TEMP. RANGE: -25°C TO +85°C. [INCLUDING TERMINAL TEMP. RISE]
   3-3. STORAGE TEMP.: -40°C TO 85°C.
4. DIMENSIONS MARKED ℄ ARE MAJOR CHECKED DIMENSIONS.
5. HARMFUL MATERIAL CONTROL PLEASE FOLLOW DOC. NO. "EPI12".
6. QUANTITY OF PRODUCTS: 1000PCS/REEL
7. Salt spray time: 24H

GENERAL TOLERANCE	DONGGUAN BAOXUN PRECISION TECHNOLOGY CO., LTD				BXCONN®
DIM. TOL. X X.X ±0.30 X.XX ±0.25 X.XXX ±0.15 GENERAL ANGLE: ±3°	TITLE: MICRO SIM CARD PUSH PUSH 6PIN H1.35				
	DWG. NO.: SIM202-TZ6P			DRAWN: MAX	
	PART NO.: SIM202-TZ6P			CHECKED: ELLA	
	UNIT: mm	SCALE: none	SHEET: 1of 1	DWG. SIZE: A4	LAYER: bxconn	APPROVED: WILL

REV.	DESCRIPTION	ECN NO.	NAME	DATE

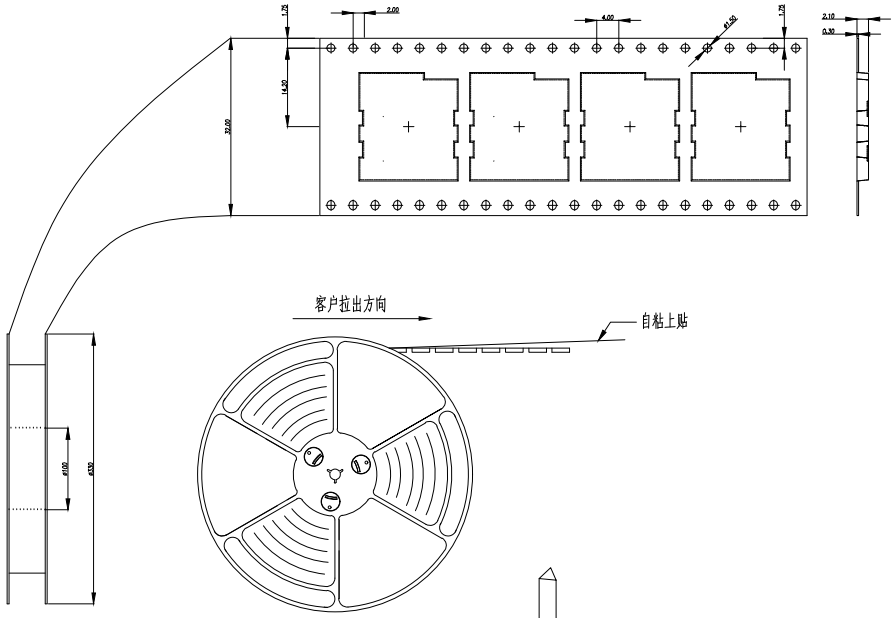

NOTES

1. NUMBER OF CONNECTORS:1000PCS/REEL
2. LEAD TAPE LENGTH

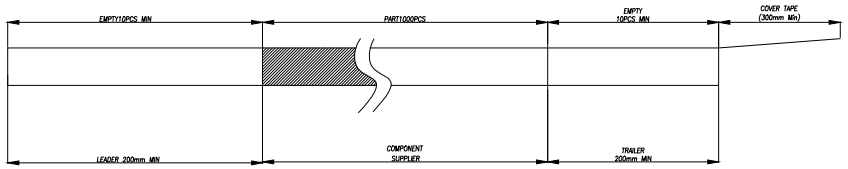

3.QUANTITY:10000PCS/CARTON

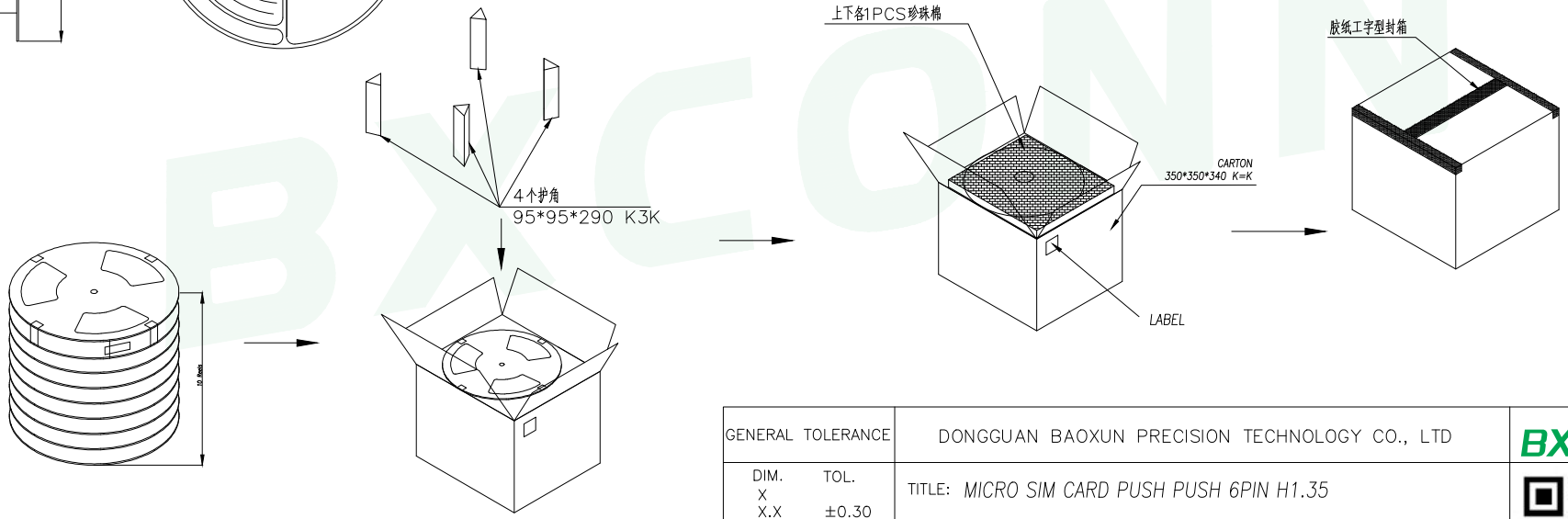

GENERAL TOLERANCE	DONGGUAN BAOXUN PRECISION TECHNOLOGY CO., LTD					BXCONN®
DIM. TOL. X X.X ±0.30 X.XX ±0.25 X.XXX ±0.15 GENERAL ANGLE: ±3°	TITLE: MICRO SIM CARD PUSH PUSH 6PIN H1.35					
	DWG. NO.: SIM202-TZ6P				DRAWN: MAX	
	PART NO.: SIM202-TZ6P				CHECKED: ELLA	
	UNIT: mm	SCALE: none	SHEET: 1of 1	DWG. SIZE: A4	LAYER: bxconn	APPROVED: WILL