SAMZO | REAC/ROHS

REV	ECN NO	DESRIPTION	DESIGN	APPROVAL	DATE
A1	NEW	Replace frame			2020.06.12

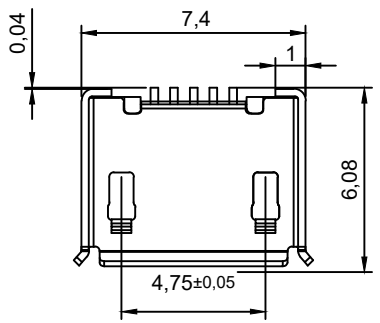

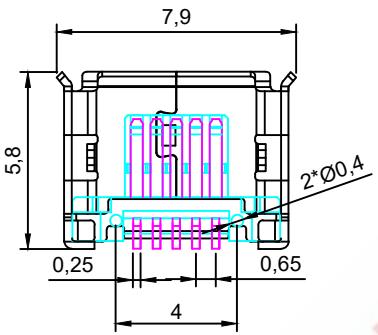

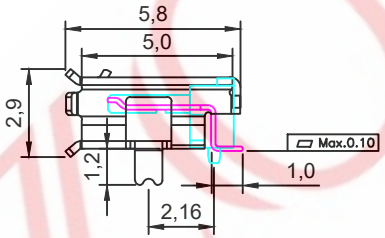

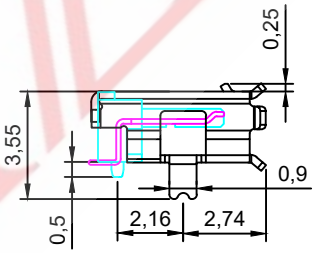

产品规格:Specifications:

电气特性:Electrical:

1.额定电流: Current Rating
1.5A/contact terminal

2.额定电压: Voltage Rating
30V DC

3.接触阻抗:Contact Resistance
30 milliohms MAX

4.耐电压:Dielectnic Withstanding Voitage:
100 V AC AT Sea Levol

5.绝缘阻抗:Lnsulation Resistance:
100MEGA ohms MIN

物理性能:Mechanical:

1.插拔力: Connector Mate and Unmate Force
Mate force:3.57kgf(MAX)
Unmate force:1.02kgf(MIN)

2.端子保持力: Terminal Retenion
0.5kgf(MIN)

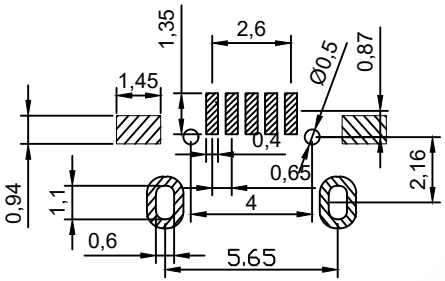

RECOMMENDE.P.C.B LAYOUT(TOP VIEW)
EFAULT YOLERANCE:±0.05

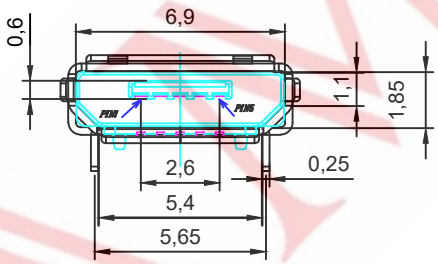

UC C G A T D A Y D

- Code: D10.
- Interface: Curled edge.
- Lifetime: 3,000 cycles.
- Material: SUS.
- Type: Fixed column.
- Appearance size: 5mm.
- Mounting method: Front insertion and rear mounting.
- Specification: 5 pin.
- Series: Micro USB.

ITEM	DESCRIPTION	MATERIAL	QTY	FINSH/COLOR					
C	塑胶	LCP	1	黑 色	DESIGN	WANGGUIFA	2020.06.12		
B	端子	C2680/C5191	1	镀 金	CHECKED	ZHENGUILAN	2020.06.12		
A	外壳	SUS/C2680	1	镀 锡	APPROVED	LILIANJIANG	2020.06.14		

GENERAL TOLERANCE	
≥0~2<	±0.15
≥2~5<	±0.25
≥0~2<	±0.15
≥5	±0.35

FIRST VIEW

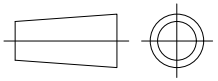

SCALE	1:1	UNIT	mm

The copyright belongs to samzo parts [China] Co., Ltd. please use the material after samzo parts agree to authorize. The final right of interpretation belongs to samzo parts.
WWW.KKK-JP.COM

SAMZO COMPONENTS
Electronic switch and connector manufacturer

TITLE:: MICRO 5P 前插后贴 卷边带柱有焊盘
DWG NO: UCCGA-P0031
PART NO: UCCGA130210
MODEL NO: UCCGATDAYD
NAME: MICRO CONN